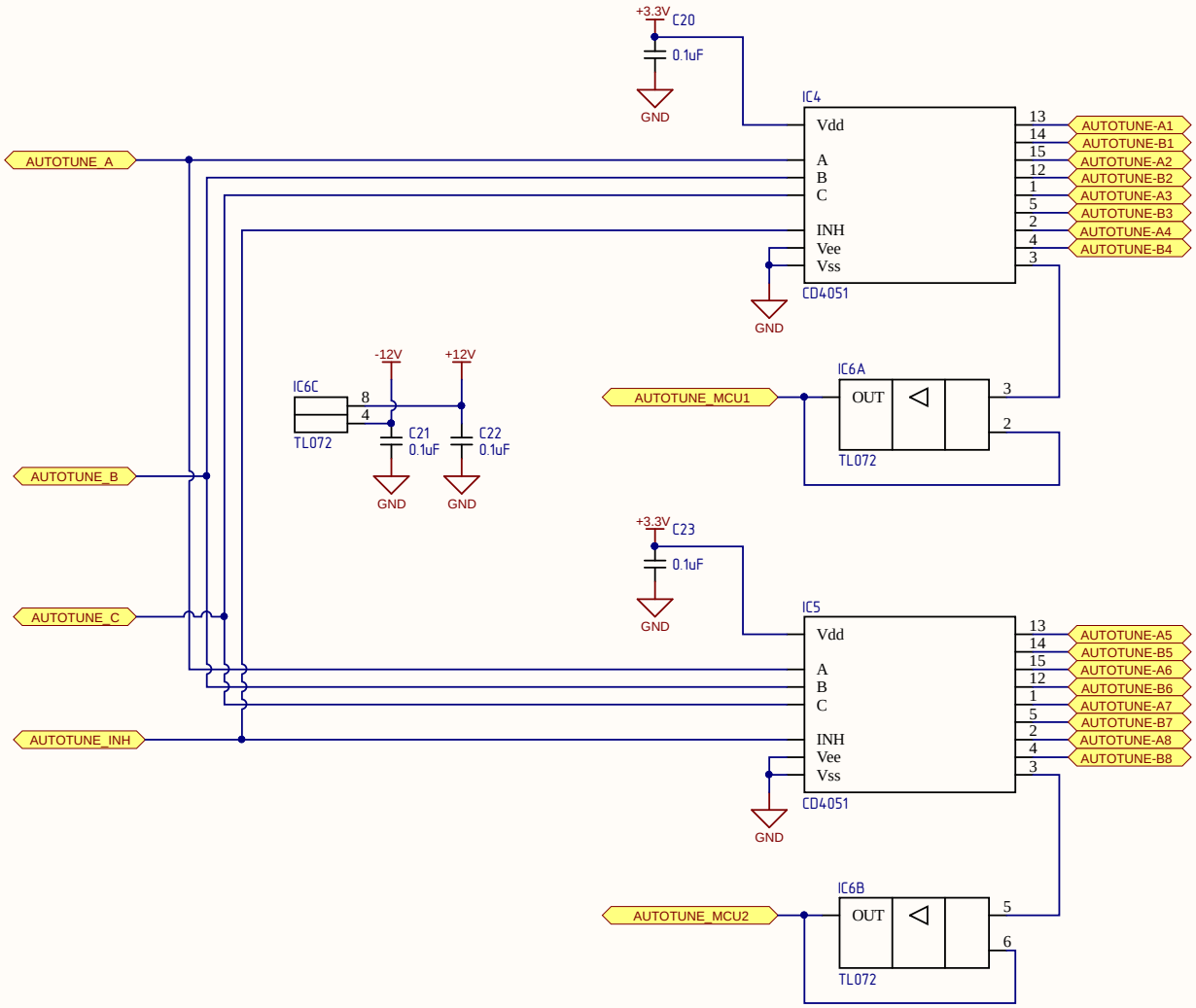
+3.3V
C20
0.1uF
GND
IC4
Vdd
A
B
C
INH
Vee
Vss
CD4051
13
14
15
12
1
5
2
4
3
AUTOTUNE-A1
AUTOTUNE-B1
AUTOTUNE-A2
AUTOTUNE-B2
AUTOTUNE-A3
AUTOTUNE-B3
AUTOTUNE-A4
AUTOTUNE-B4
AUTOTUNE_A
AUTOTUNE_B
AUTOTUNE_C
AUTOTUNE_INH
-12V
+12V
IC6C
8
4
TL072
C21
0.1uF
C22
0.1uF
AUTOTUNE_MCU1
IC6A
OUT
3
2
TL072
+3.3V
C23
0.1uF
IC5
AUTOTUNE-A5
AUTOTUNE-B5
AUTOTUNE-A6
AUTOTUNE-B6
AUTOTUNE-A7
AUTOTUNE-B7
AUTOTUNE-A8
AUTOTUNE-B8
AUTOTUNE_MCU2
IC6B
5
6

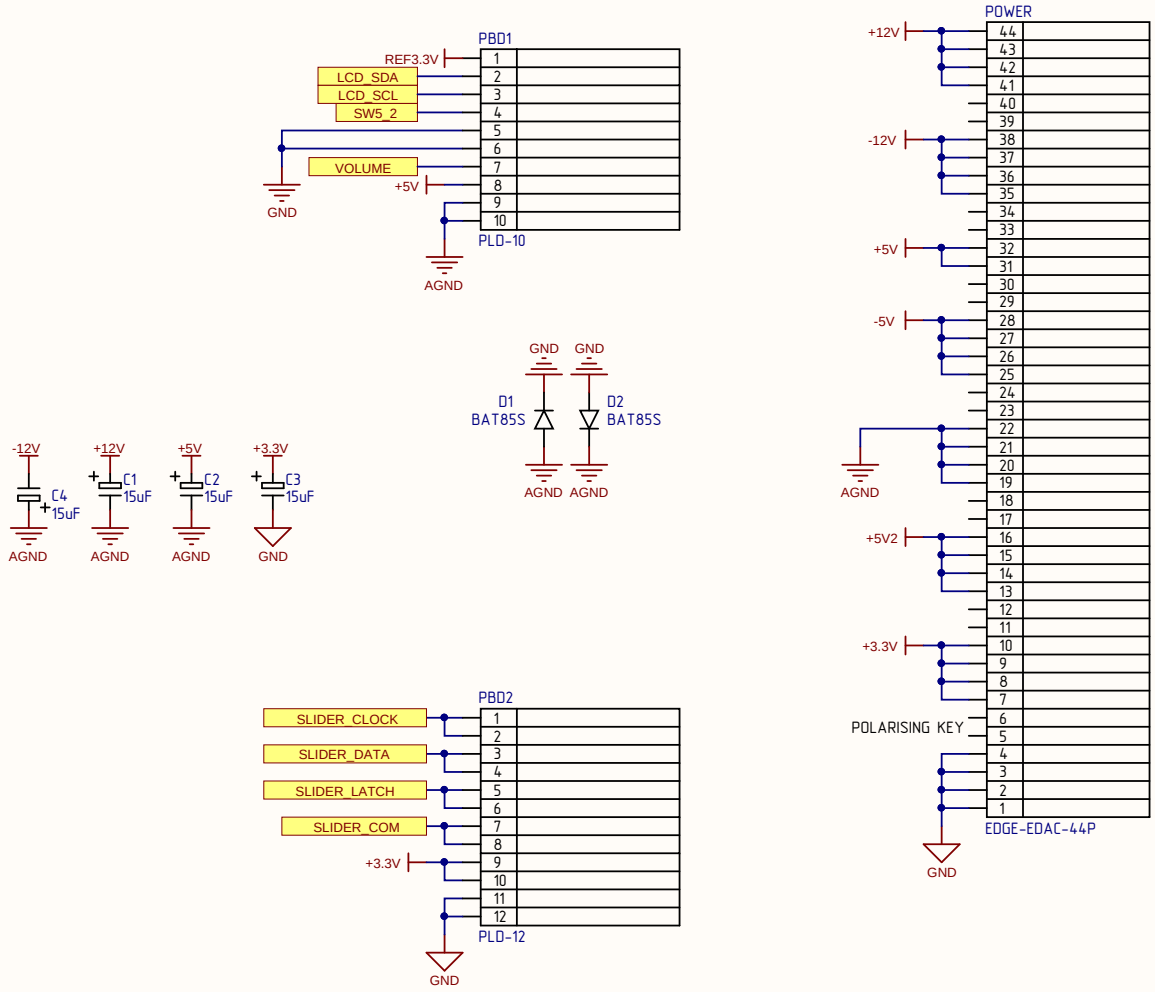
PBD1
REF3.3V
LCD_SDA
LCD_SCL
SW5_2
VOLUME
+5V
GND
AGND
PLD-10
POWER
+12V
-12V
+5V
-5V
+5V2
+3.3V
POLARISING KEY
AGND
GND
EDGE-EDAC-44P
GND GND
D1
BAT85S
D2
BAT85S
AGND AGND
-12V +12V +5V +3.3V
C4
15uF
C1
15uF
C2
15uF
C3
15uF
AGND AGND AGND GND
PBD2
SLIDER_CLOCK
SLIDER_DATA
SLIDER_LATCH
SLIDER_COM
+3.3V
GND
PLD-12

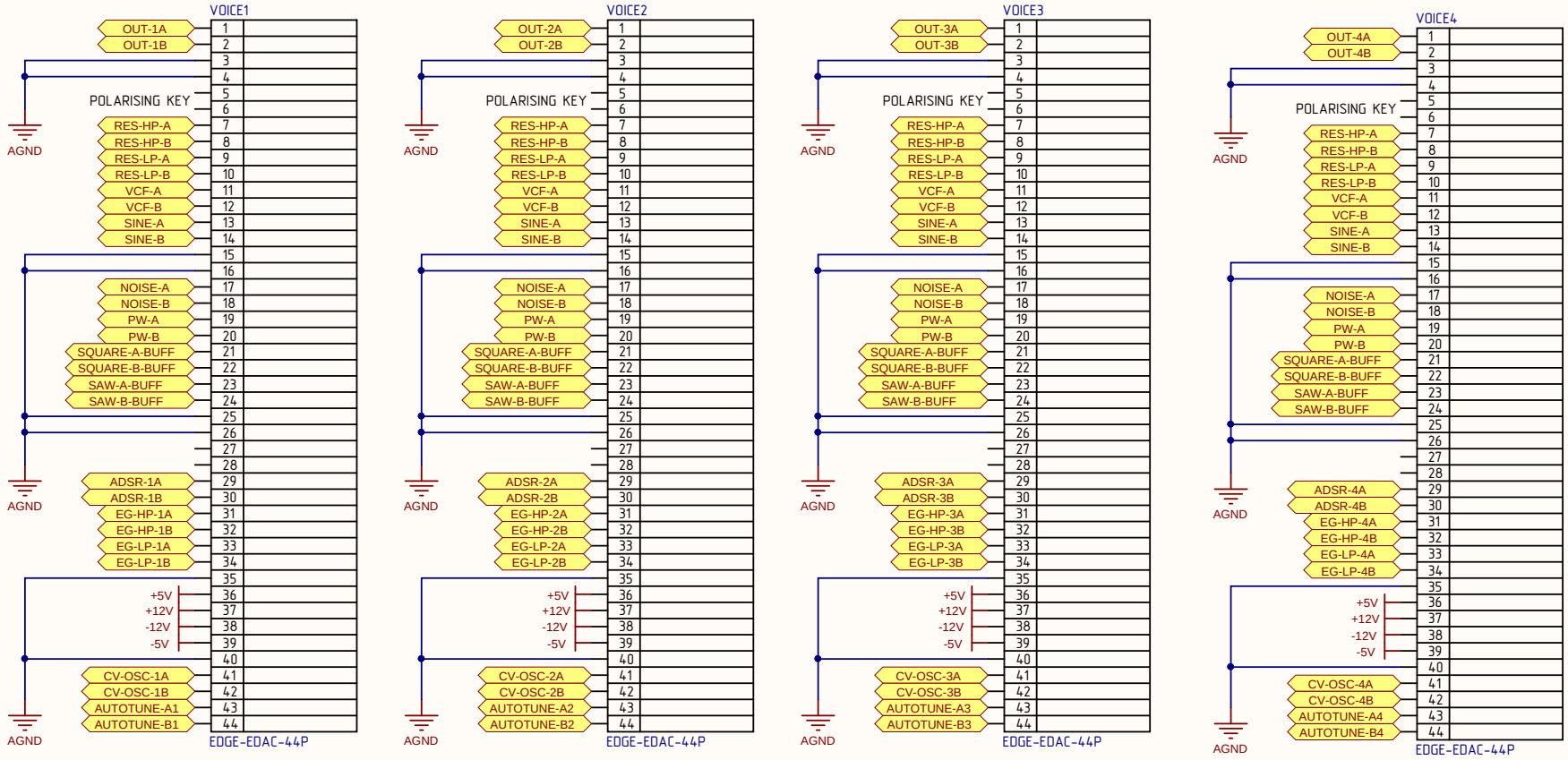
VOICE1
OUT-1A
OUT-1B
POLARISING KEY
RES-HP-A
RES-HP-B
RES-LP-A
RES-LP-B
VCF-A
VCF-B
SINE-A
SINE-B
NOISE-A
NOISE-B
PW-A
PW-B
SQUARE-A-BUFF
SQUARE-B-BUFF
SAW-A-BUFF
SAW-B-BUFF
ADSR-1A
ADSR-1B
EG-HP-1A
EG-HP-1B
EG-LP-1A
EG-LP-1B
+5V
+12V
-12V
-5V
CV-OSC-1A
CV-OSC-1B
AUTOTUNE-A1
AUTOTUNE-B1
AGND
EDGE-EDAC-44P
VOICE2
OUT-2A
OUT-2B
ADSR-2A
ADSR-2B
EG-HP-2A
EG-HP-2B
EG-LP-2A
EG-LP-2B
CV-OSC-2A
CV-OSC-2B
AUTOTUNE-A2
AUTOTUNE-B2
VOICE3
OUT-3A
OUT-3B
ADSR-3A
ADSR-3B
EG-HP-3A
EG-HP-3B
EG-LP-3A
EG-LP-3B
CV-OSC-3A
CV-OSC-3B
AUTOTUNE-A3
AUTOTUNE-B3
VOICE4
OUT-4A
OUT-4B
ADSR-4A
ADSR-4B
EG-HP-4A
EG-HP-4B
EG-LP-4A
EG-LP-4B
CV-OSC-4A
CV-OSC-4B
AUTOTUNE-A4
AUTOTUNE-B4

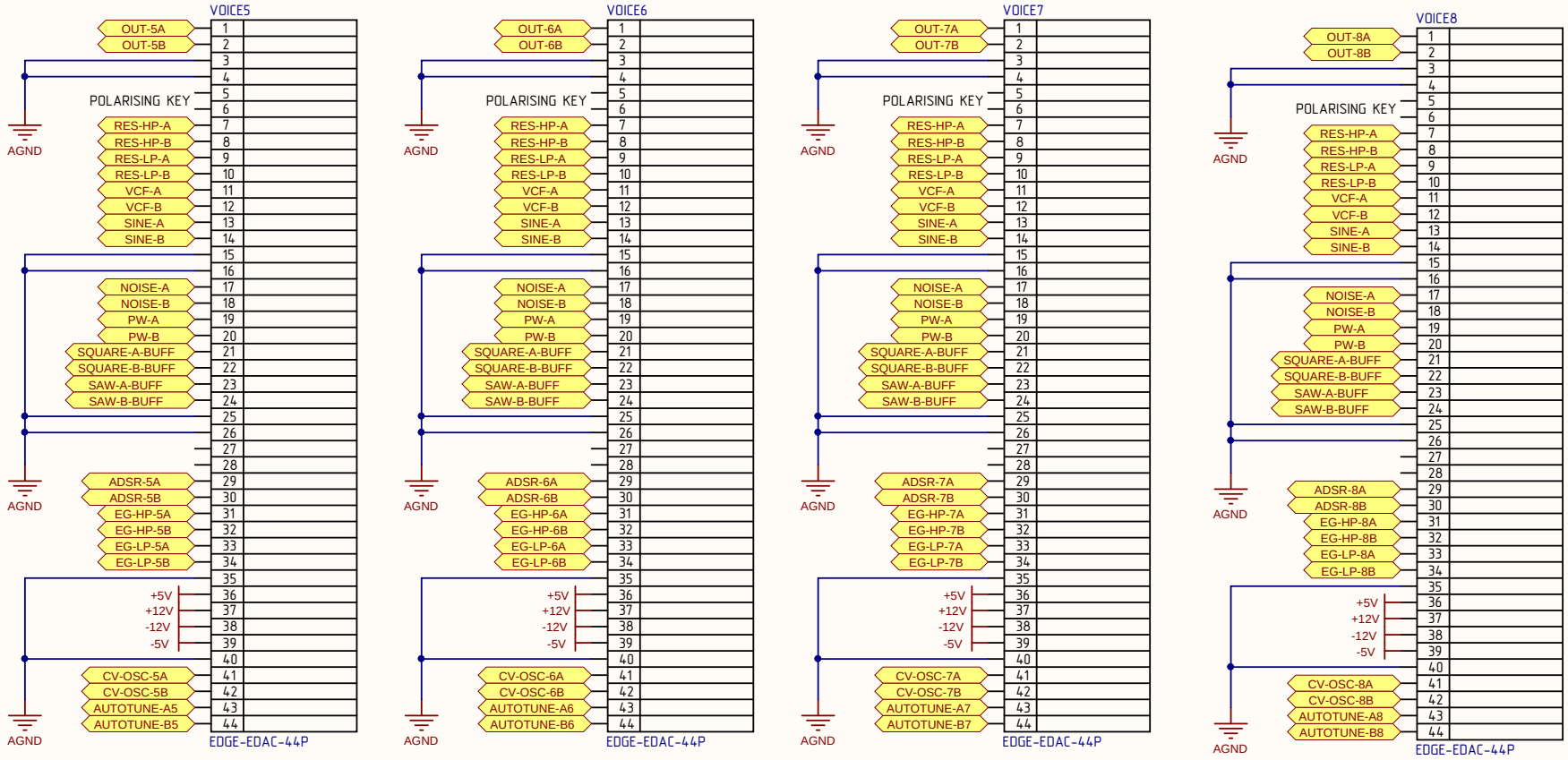
VOICE5
OUT-5A
OUT-5B
POLARISING KEY
RES-HP-A
RES-HP-B
RES-LP-A
RES-LP-B
VCF-A
VCF-B
SINE-A
SINE-B
NOISE-A
NOISE-B
PW-A
PW-B
SQUARE-A-BUFF
SQUARE-B-BUFF
SAW-A-BUFF
SAW-B-BUFF
ADSR-5A
ADSR-5B
EG-HP-5A
EG-HP-5B
EG-LP-5A
EG-LP-5B
+5V
+12V
-12V
-5V
CV-OSC-5A
CV-OSC-5B
AUTOTUNE-A5
AUTOTUNE-B5
AGND
EDGE-EDAC-44P
VOICE6
OUT-6A
OUT-6B
ADSR-6A
ADSR-6B
EG-HP-6A
EG-HP-6B
EG-LP-6A
EG-LP-6B
CV-OSC-6A
CV-OSC-6B
AUTOTUNE-A6
AUTOTUNE-B6
VOICE7
OUT-7A
OUT-7B
ADSR-7A
ADSR-7B
EG-HP-7A
EG-HP-7B
EG-LP-7A
EG-LP-7B
CV-OSC-7A
CV-OSC-7B
AUTOTUNE-A7
AUTOTUNE-B7
VOICE8
OUT-8A
OUT-8B
ADSR-8A
ADSR-8B
EG-HP-8A
EG-HP-8B
EG-LP-8A
EG-LP-8B
CV-OSC-8A
CV-OSC-8B
AUTOTUNE-A8
AUTOTUNE-B8

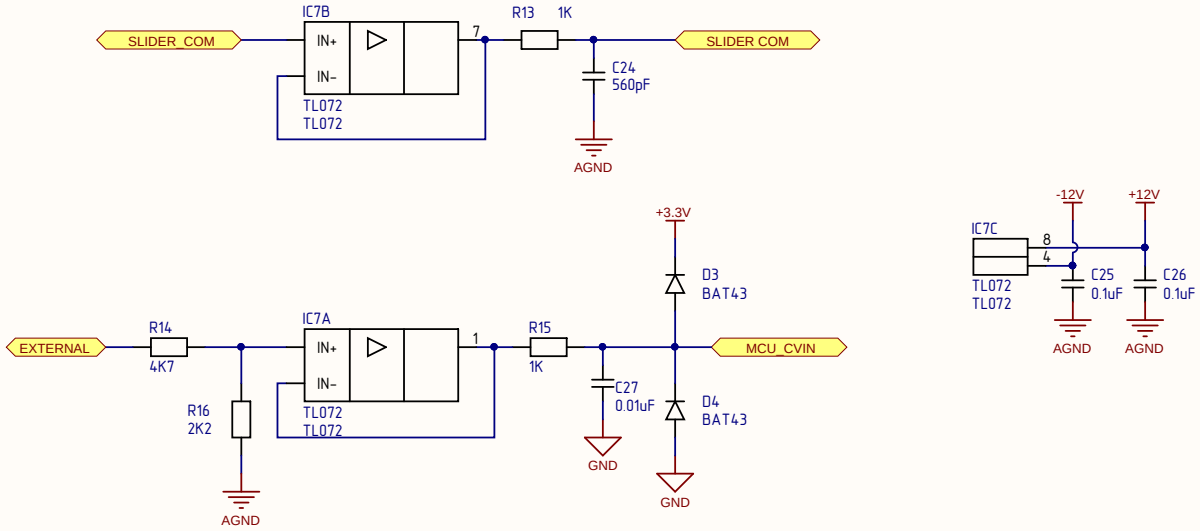


| Title | | |
|---|---|---|
| Size A4 | Number | Revision |
| Date: 2019/06/27 | | Sheet of |
| File: C:\Users\..\CV.SchDoc | | Drawn By: |

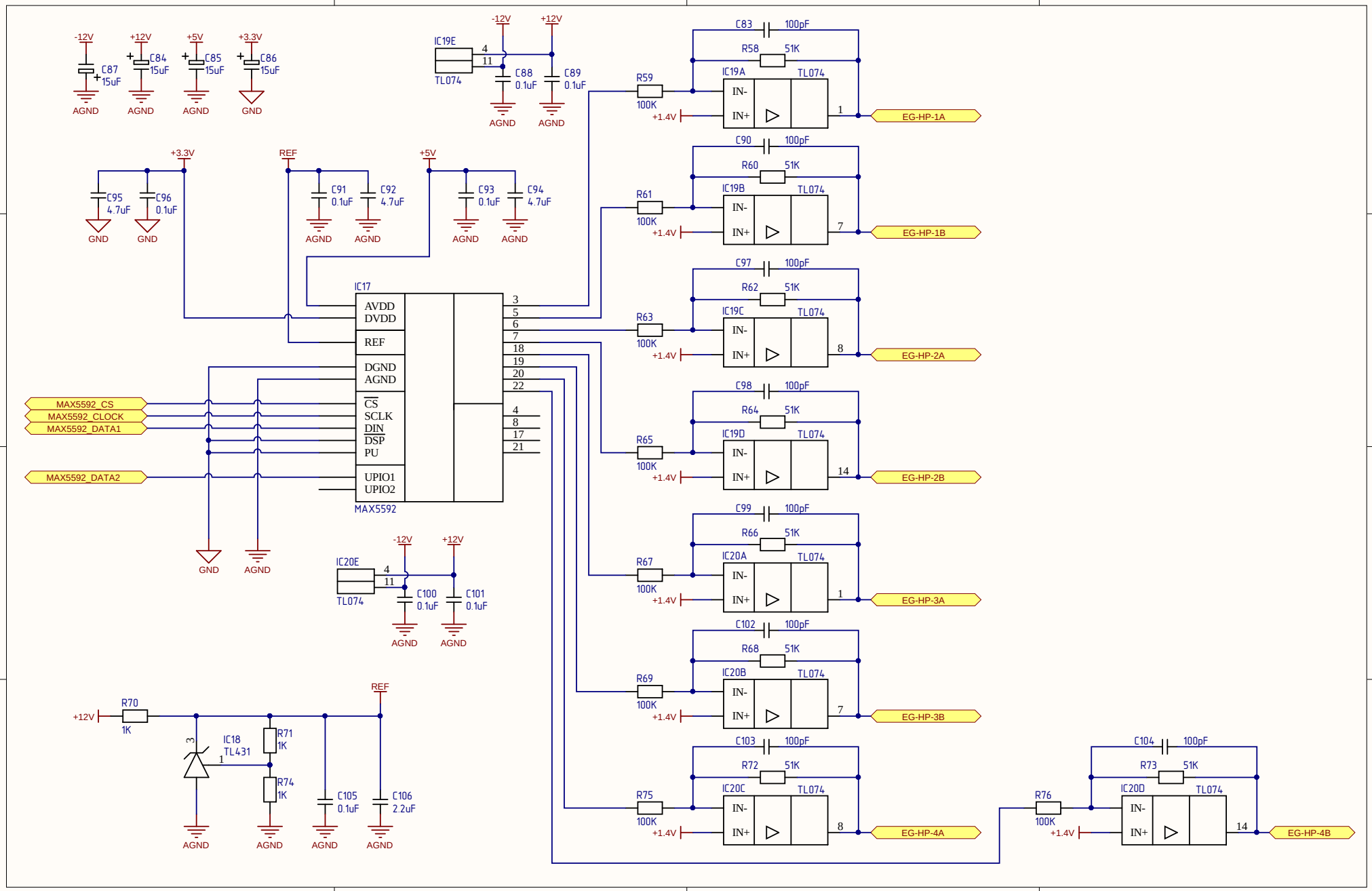
-12V
+12V
+5V
+3.3V
C87 15uF
C84 15uF
C85 15uF
C86 15uF
AGND
GND
IC19E
TL074
C88 0.1uF
C89 0.1uF
C95 4.7uF
C96 0.1uF
REF
C91 0.1uF
C92 4.7uF
C93 0.1uF
C94 4.7uF
IC17
AVDD
DVDD
REF
DGND
AGND
CS
SCLK
DIN
DSP
PU
UPIO1
UPIO2
MAX5592
MAX5592_CS
MAX5592_CLOCK
MAX5592_DATA1
MAX5592_DATA2
IC20E
C100 0.1uF
C101 0.1uF
R70 1K
IC18 TL431
R71 1K
R74 1K
C105 0.1uF
C106 2.2uF
C83 100pF
R58 51K
IC19A
R59 100K
+1.4V
EG-HP-1A
C90 100pF
R60 51K
IC19B
R61 100K
EG-HP-1B
C97 100pF
R62 51K
IC19C
R63 100K
EG-HP-2A
C98 100pF
R64 51K
IC19D
R65 100K
EG-HP-2B
C99 100pF
R66 51K
IC20A
R67 100K
EG-HP-3A
C102 100pF
R68 51K
IC20B
R69 100K
EG-HP-3B
C103 100pF
R72 51K
IC20C
R75 100K
EG-HP-4A
C104 100pF
R73 51K
IC20D
R76 100K
EG-HP-4B
IN-
IN+

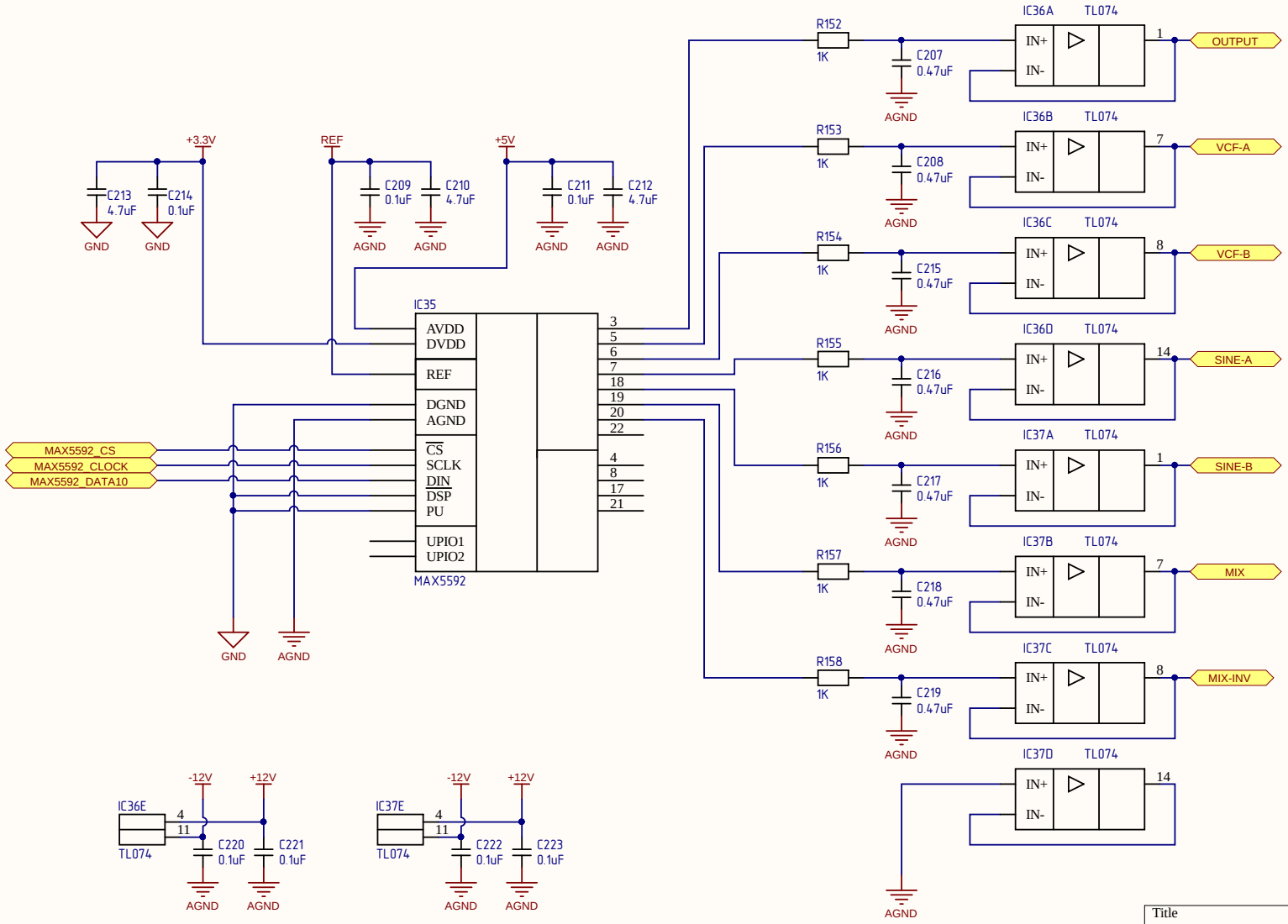


| Title | | |
|---|---|---|
| Size A4 | Number | Revision |
| Date: 2019/06/27 | | Sheet of |
| File: C:\Users\..\MAX5592_DAC10.SchDoc | | Drawn By: |

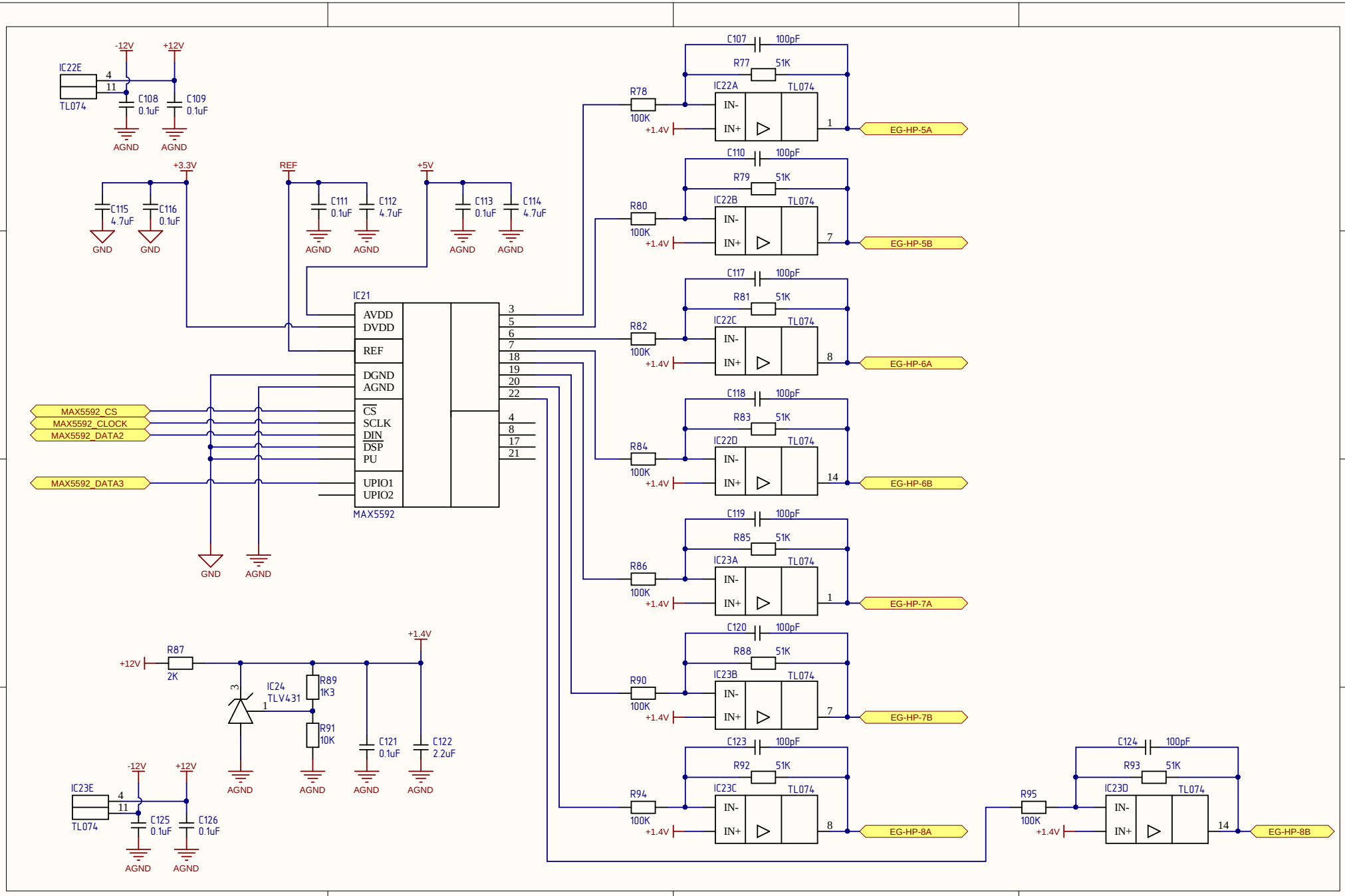
IC22E
TL074
-12V
+12V
C108 0.1uF
C109 0.1uF
AGND
+3.3V
REF
+5V
C115 4.7uF
C116 0.1uF
GND
C111 0.1uF
C112 4.7uF
C113 0.1uF
C114 4.7uF
IC21
AVDD
DVDD
REF
DGND
AGND
CS
SCLK
DIN
DSP
PU
UPIO1
UPIO2
MAX5592
MAX5592_CS
MAX5592_CLOCK
MAX5592_DATA2
MAX5592_DATA3
C107 100pF
R77 51K
IC22A
R78 100K
+1.4V
EG-HP-5A
C110 100pF
R79 51K
IC22B
R80 100K
EG-HP-5B
C117 100pF
R81 51K
IC22C
R82 100K
EG-HP-6A
C118 100pF
R83 51K
IC22D
R84 100K
EG-HP-6B
C119 100pF
R85 51K
IC23A
R86 100K
EG-HP-7A
C120 100pF
R88 51K
IC23B
R90 100K
EG-HP-7B
C123 100pF
R92 51K
IC23C
R94 100K
EG-HP-8A
C124 100pF
R93 51K
IC23D
R95 100K
EG-HP-8B
IN-
IN+
R87 2K
IC24 TLV431
R89 1K3
R91 10K
C121 0.1uF
C122 2.2uF
IC23E
C125 0.1uF
C126 0.1uF

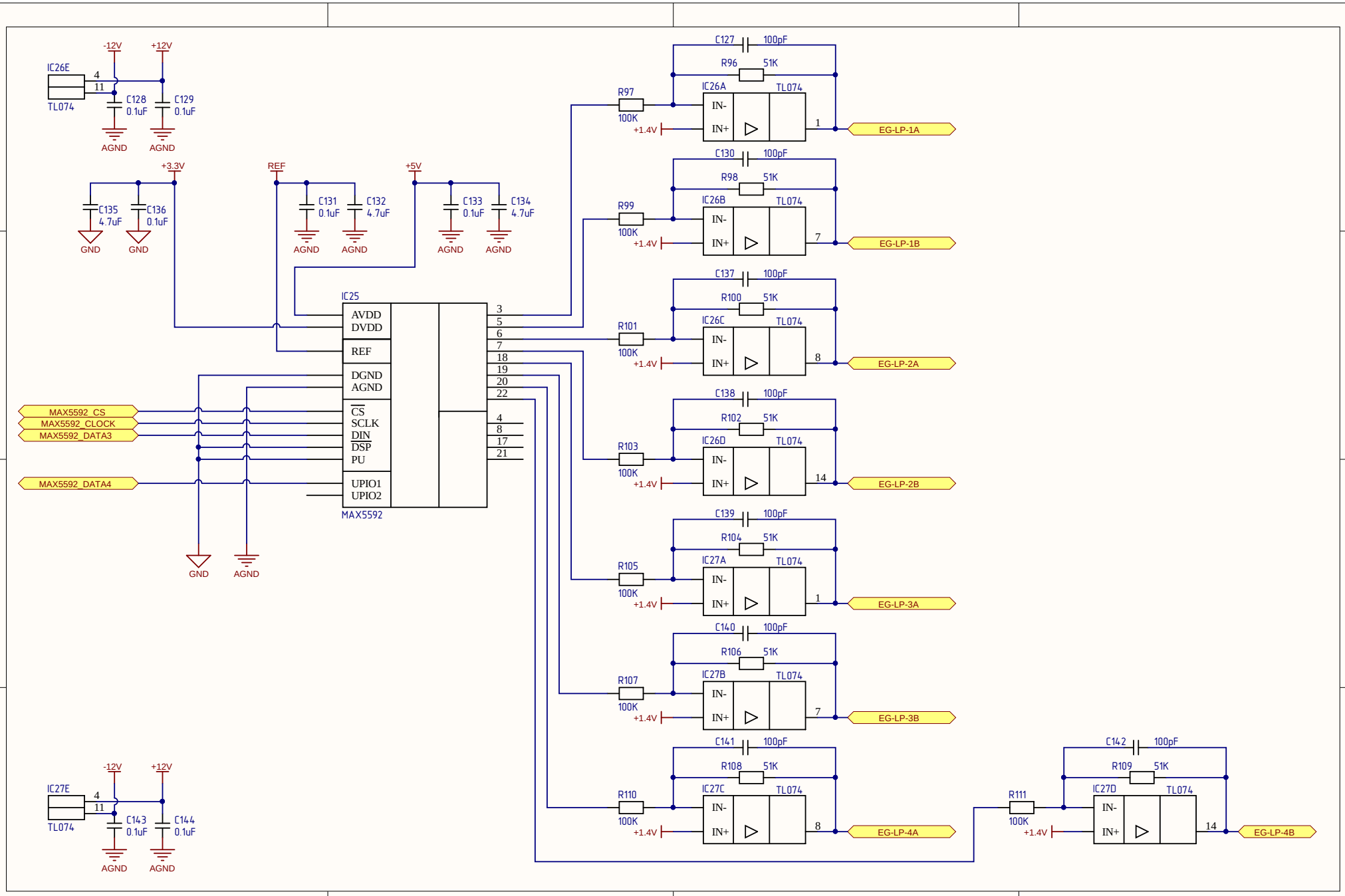
IC26E
TL074
-12V
+12V
C128 0.1uF
C129 0.1uF
AGND
+3.3V
C135 4.7uF
C136 0.1uF
GND
REF
C131 0.1uF
C132 4.7uF
+5V
C133 0.1uF
C134 4.7uF
IC25
AVDD
DVDD
REF
DGND
AGND
CS
SCLK
DIN
DSP
PU
UPIO1
UPIO2
MAX5592
MAX5592_CS
MAX5592_CLOCK
MAX5592_DATA3
MAX5592_DATA4
C127 100pF
R96 51K
R97 100K
+1.4V
IC26A
IN-
IN+
EG-LP-1A
C130 100pF
R98 51K
R99 100K
IC26B
EG-LP-1B
C137 100pF
R100 51K
R101 100K
IC26C
EG-LP-2A
C138 100pF
R102 51K
R103 100K
IC26D
EG-LP-2B
C139 100pF
R104 51K
R105 100K
IC27A
EG-LP-3A
C140 100pF
R106 51K
R107 100K
IC27B
EG-LP-3B
C141 100pF
R108 51K
R110 100K
IC27C
EG-LP-4A
IC27E
C143 0.1uF
C144 0.1uF
C142 100pF
R109 51K
R111 100K
IC27D
EG-LP-4B

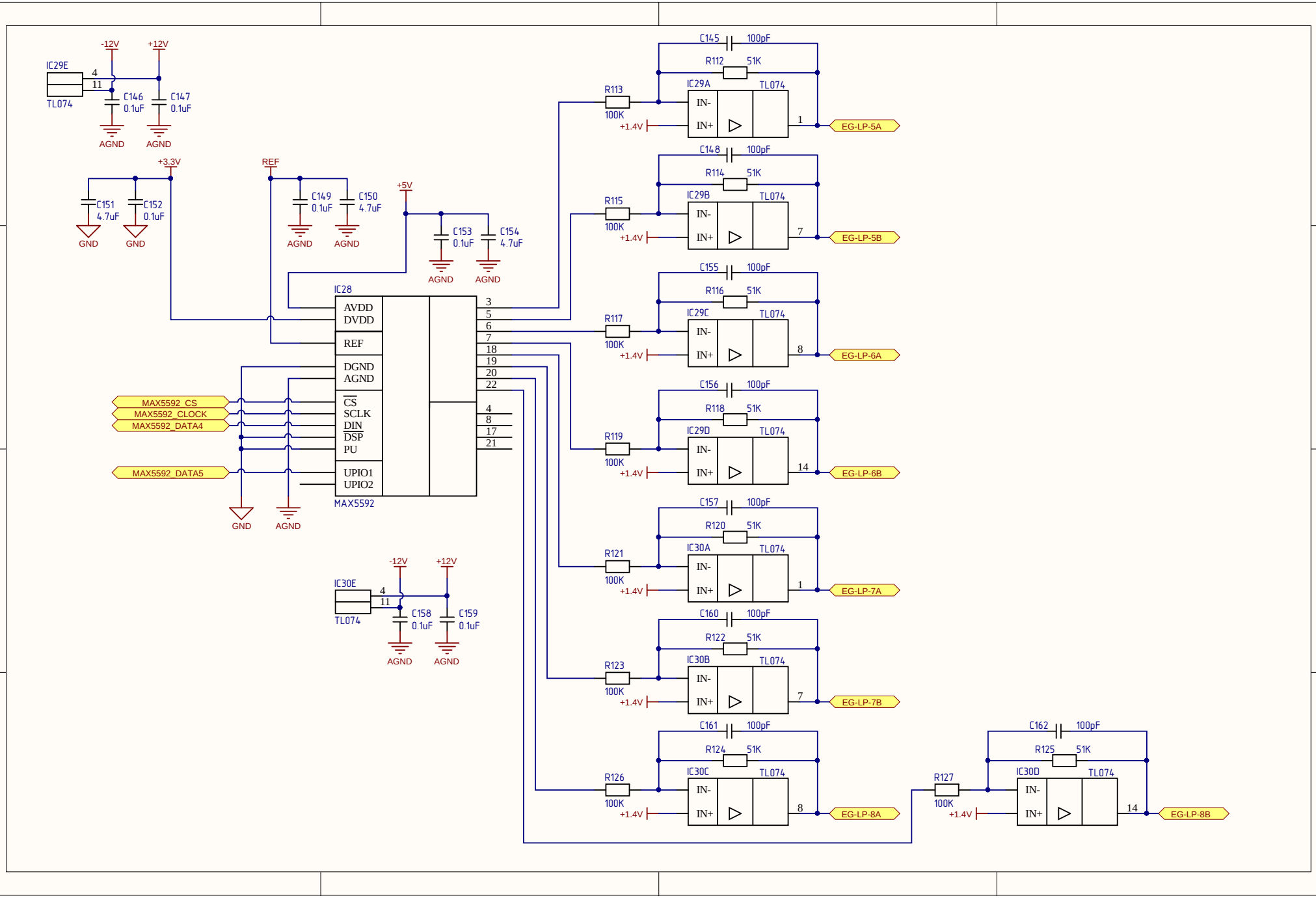
IC29E
TL074
-12V
+12V
C146 0.1uF
C147 0.1uF
AGND
+3.3V
C151 4.7uF
C152 0.1uF
GND
REF
C149 0.1uF
C150 4.7uF
+5V
C153 0.1uF
C154 4.7uF
IC28
AVDD
DVDD
REF
DGND
AGND
CS
SCLK
DIN
DSP
PU
UPIO1
UPIO2
MAX5592
MAX5592_CS
MAX5592_CLOCK
MAX5592_DATA4
MAX5592_DATA5
IC30E
C158 0.1uF
C159 0.1uF
C145 100pF
R112 51K
IC29A
R113 100K
+1.4V
EG-LP-5A
C148 100pF
R114 51K
IC29B
R115 100K
EG-LP-5B
C155 100pF
R116 51K
IC29C
R117 100K
EG-LP-6A
C156 100pF
R118 51K
IC29D
R119 100K
EG-LP-6B
C157 100pF
R120 51K
IC30A
R121 100K
EG-LP-7A
C160 100pF
R122 51K
IC30B
R123 100K
EG-LP-7B
C161 100pF
R124 51K
IC30C
R126 100K
EG-LP-8A
C162 100pF
R125 51K
IC30D
R127 100K
EG-LP-8B

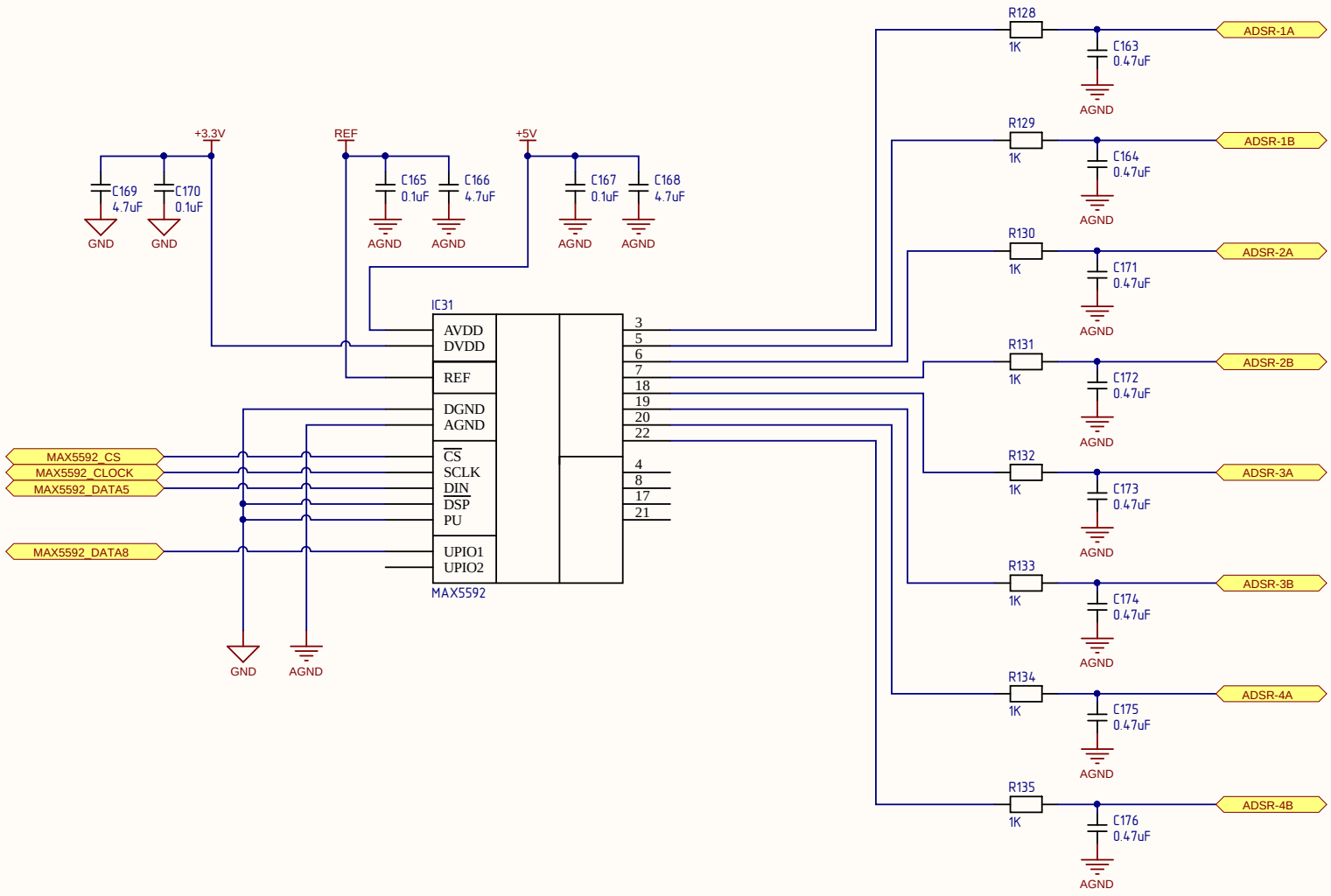


| | | |
|---|---|---|
| Title | | |
| Size A4 | Number | Revision |
| Date: 2019/06/27 | | Sheet of |
| File: C:\Users\..\MAX5592_DAC7.SchDoc | | Drawn By: |

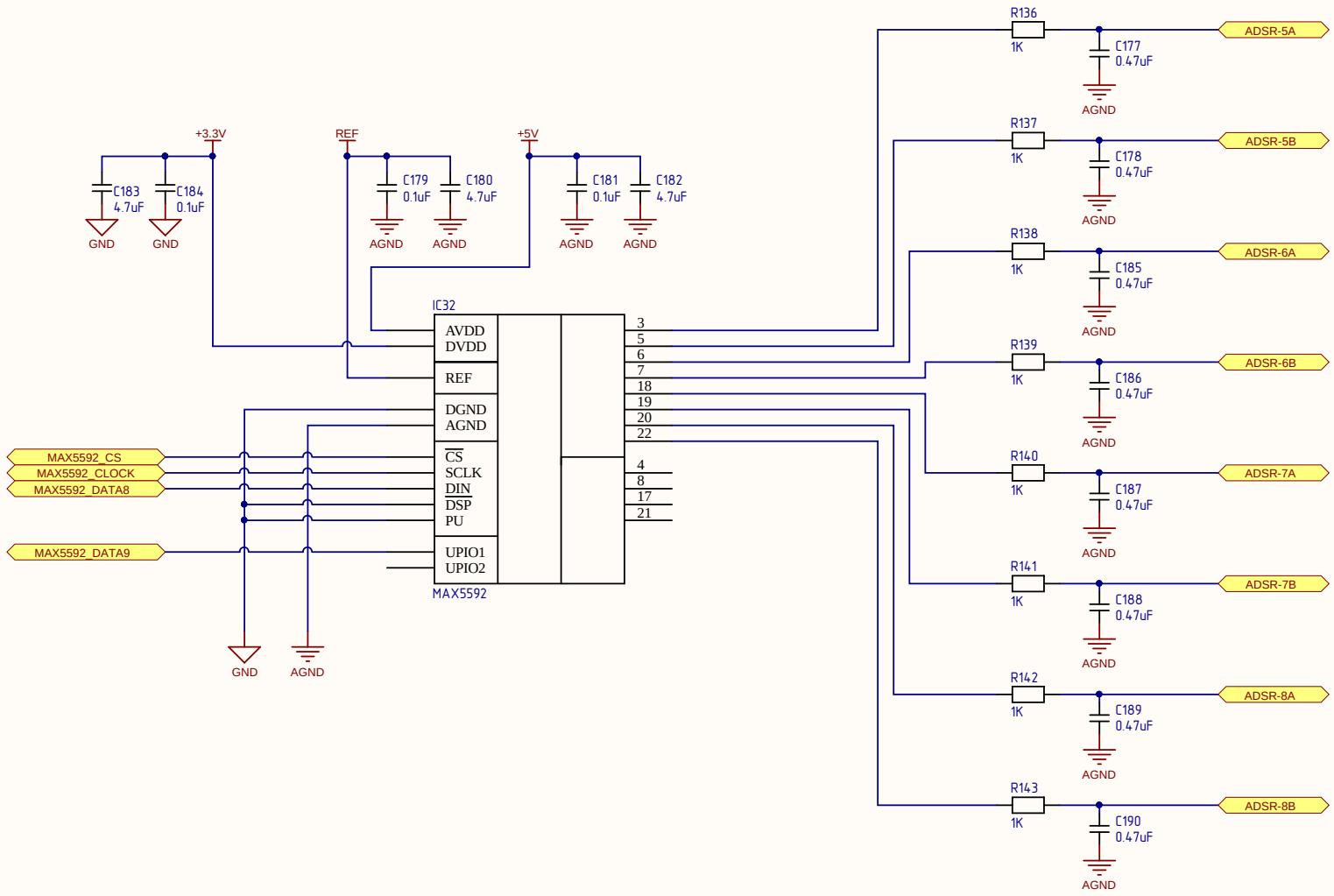


| Title | | |
|---|---|---|
| Size A4 | Number | Revision |
| Date: 2019/06/27 | | Sheet of |
| File: C:\Users\..\MAX5592_DAC8.SchDoc | | Drawn By: |

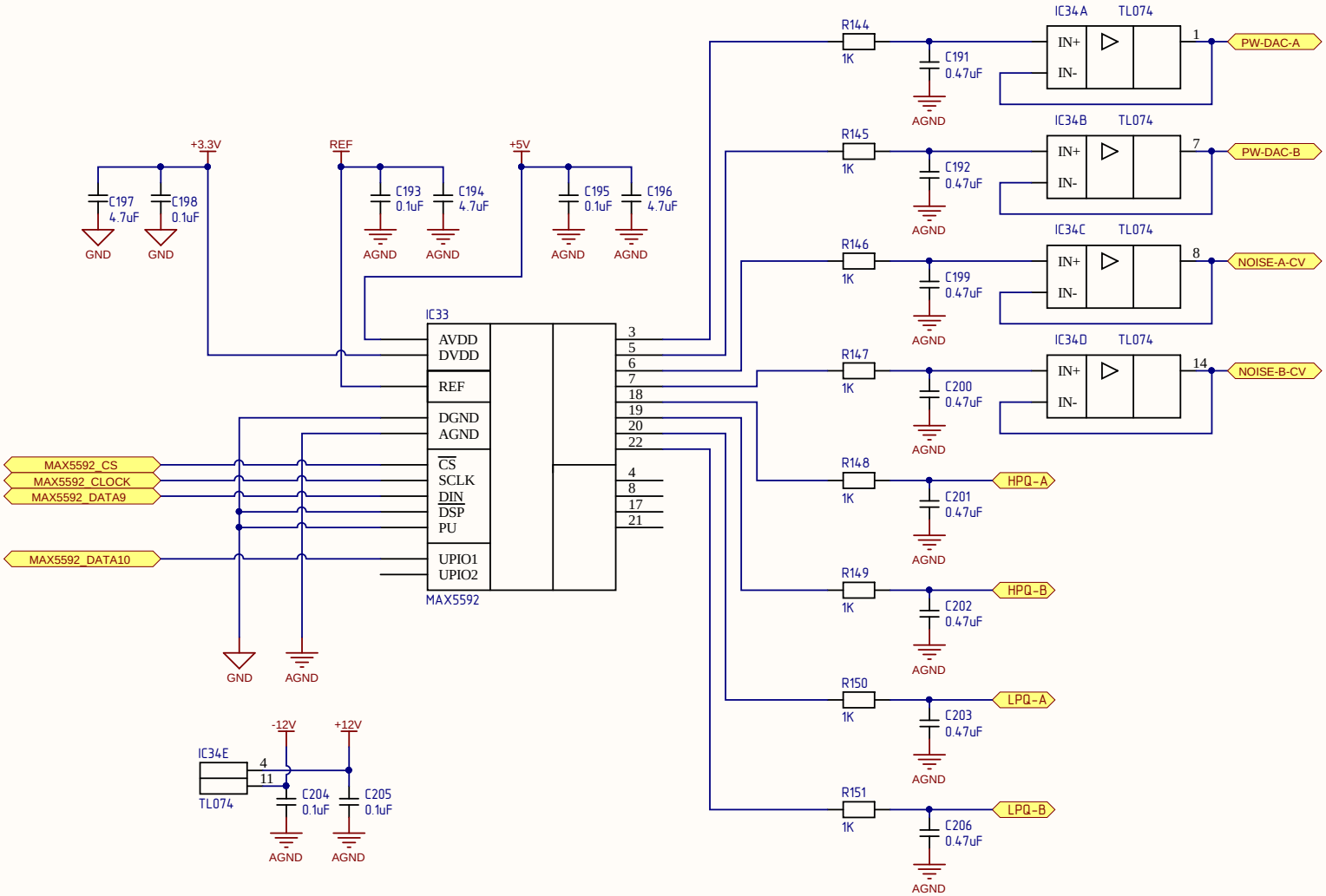


| Title | | |
|---|---|---|
| Size A4 | Number | Revision |
| Date: 2019/06/27 | | Sheet of |
| File: C:\Users\..\MAX5592_DAC9.SchDoc | | Drawn By: |

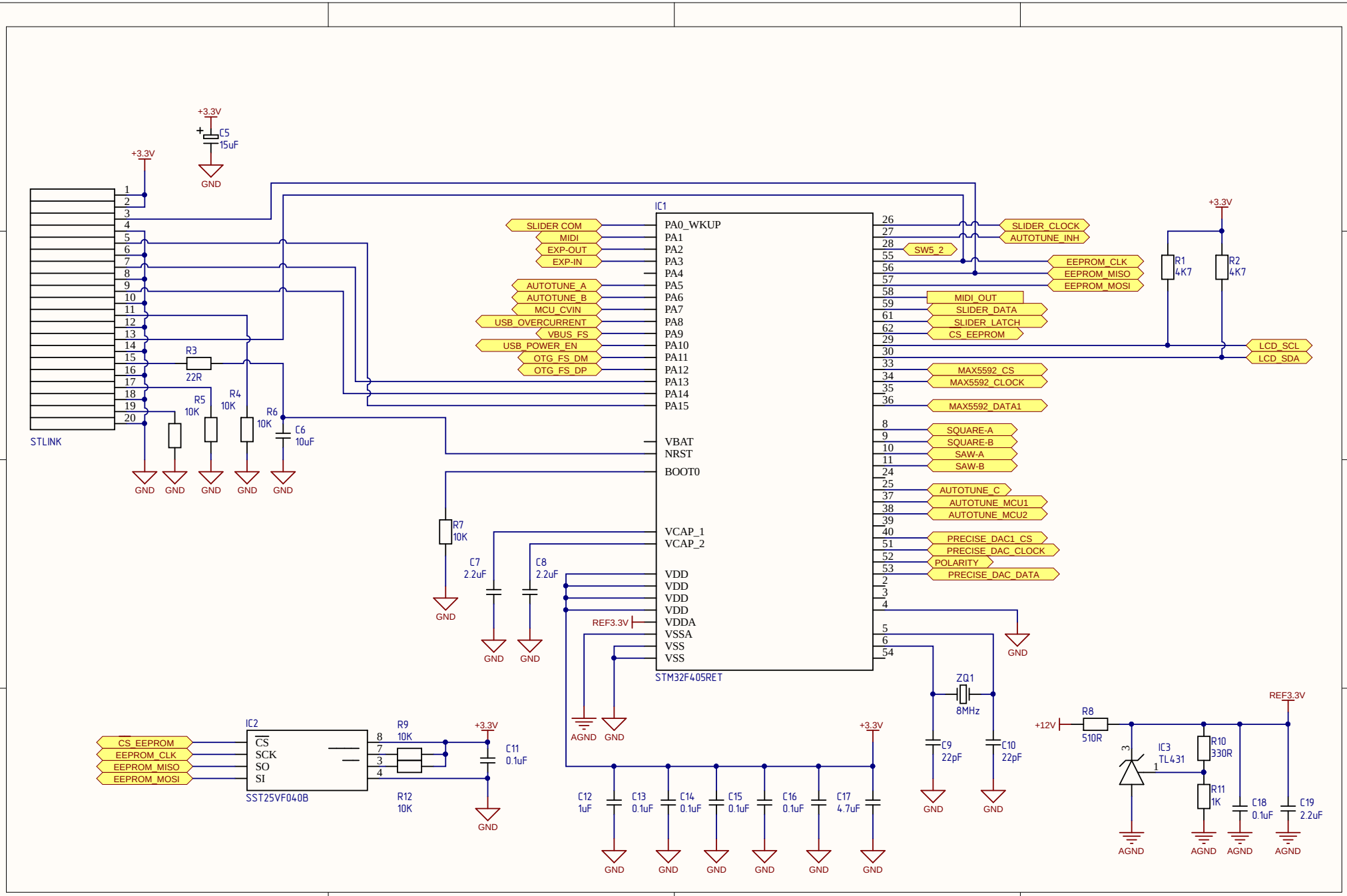
STLINK
IC1
STM32F405RET
PA0_WKUP
PA1
PA2
PA3
PA4
PA5
PA6
PA7
PA8
PA9
PA10
PA11
PA12
PA13
PA14
PA15
VBAT
NRST
BOOT0
VCAP_1
VCAP_2
VDD
VDDA
VSSA
VSS
SLIDER COM
MIDI
EXP-OUT
EXP-IN
AUTOTUNE_A
AUTOTUNE_B
MCU_CVIN
USB_OVERCURRENT
VBUS_FS
USB_POWER_EN
OTG_FS_DM
OTG_FS_DP
SLIDER_CLOCK
AUTOTUNE_INH
SW5_2
EEPROM_CLK
EEPROM_MISO
EEPROM_MOSI
MIDI_OUT
SLIDER_DATA
SLIDER_LATCH
CS_EEPROM
LCD_SCL
LCD_SDA
MAX5592_CS
MAX5592_CLOCK
MAX5592_DATA1
SQUARE-A
SQUARE-B
SAW-A
SAW-B
AUTOTUNE_C
AUTOTUNE_MCU1
AUTOTUNE_MCU2
PRECISE_DAC1_CS
PRECISE_DAC_CLOCK
POLARITY
PRECISE_DAC_DATA
IC2
SST25VF040B
CS
SCK
SO
SI
CS_EEPROM
EEPROM_CLK
EEPROM_MISO
EEPROM_MOSI
IC3
TL431
+3.3V
REF3.3V
+12V
GND
AGND
C5 15uF
R1 4K7
R2 4K7
R3 22R
R4 10K
R5 10K
R6 10K
R7 10K
R8 510R
R9 10K
R10 330R
R11 1K
R12 10K
C6 10uF
C7 2.2uF
C8 2.2uF
C9 22pF
C10 22pF
C11 0.1uF
C12 1uF
C13 0.1uF
C14 0.1uF
C15 0.1uF
C16 0.1uF
C17 4.7uF
C18 0.1uF
C19 2.2uF
ZQ1 8MHz

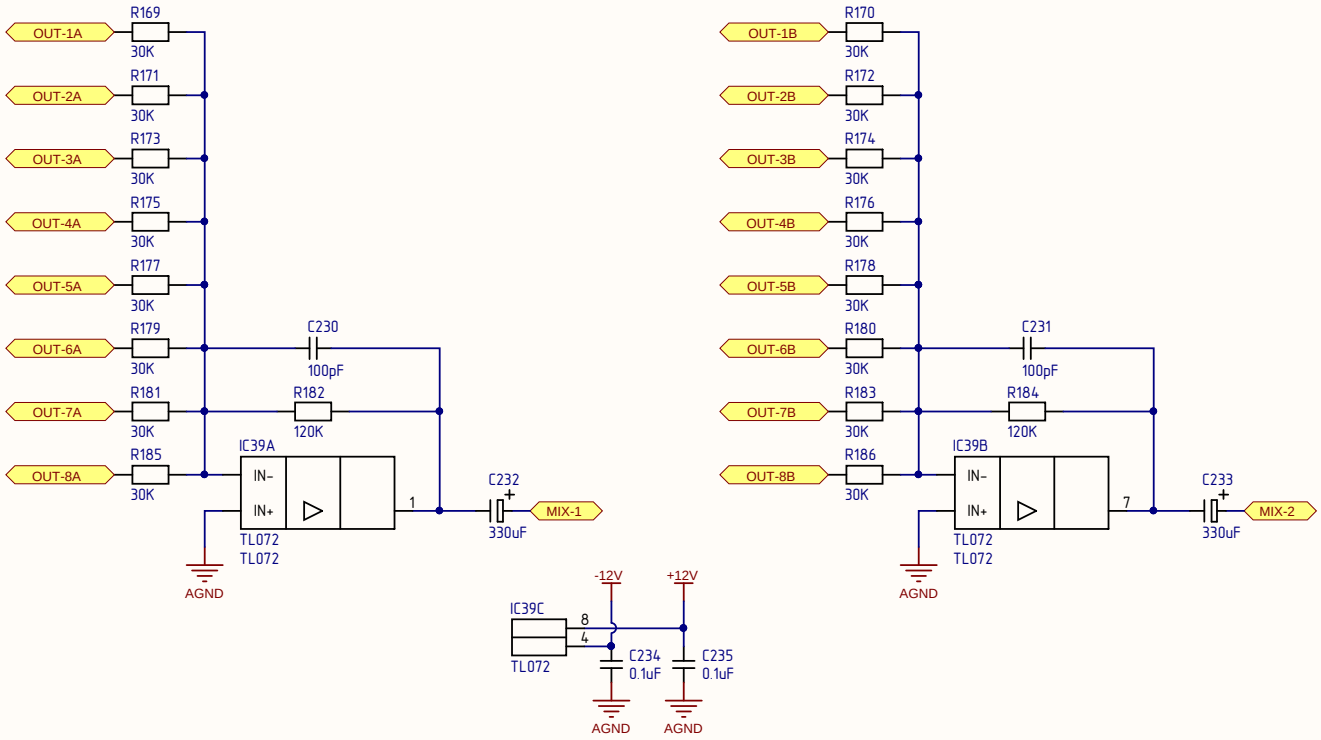
OUT-1A
OUT-2A
OUT-3A
OUT-4A
OUT-5A
OUT-6A
OUT-7A
OUT-8A
R169
R171
R173
R175
R177
R179
R181
R185
30K
C230
100pF
R182
120K
IC39A
IN-
IN+
TL072
TL072
1
C232
330uF
MIX-1
AGND
OUT-1B
OUT-2B
OUT-3B
OUT-4B
OUT-5B
OUT-6B
OUT-7B
OUT-8B
R170
R172
R174
R176
R178
R180
R183
R186
C231
100pF
R184
120K
IC39B
7
C233
330uF
MIX-2
-12V
+12V
IC39C
8
4
C234
0.1uF
C235
0.1uF

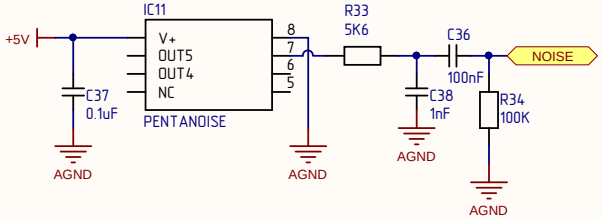


| Title | | |
|---|---|---|
| Size A4 | Number | Revision |
| Date: 2019/06/27 | | Sheet of |
| File: C:\Users\..\NOISE.SchDoc | | Drawn By: |

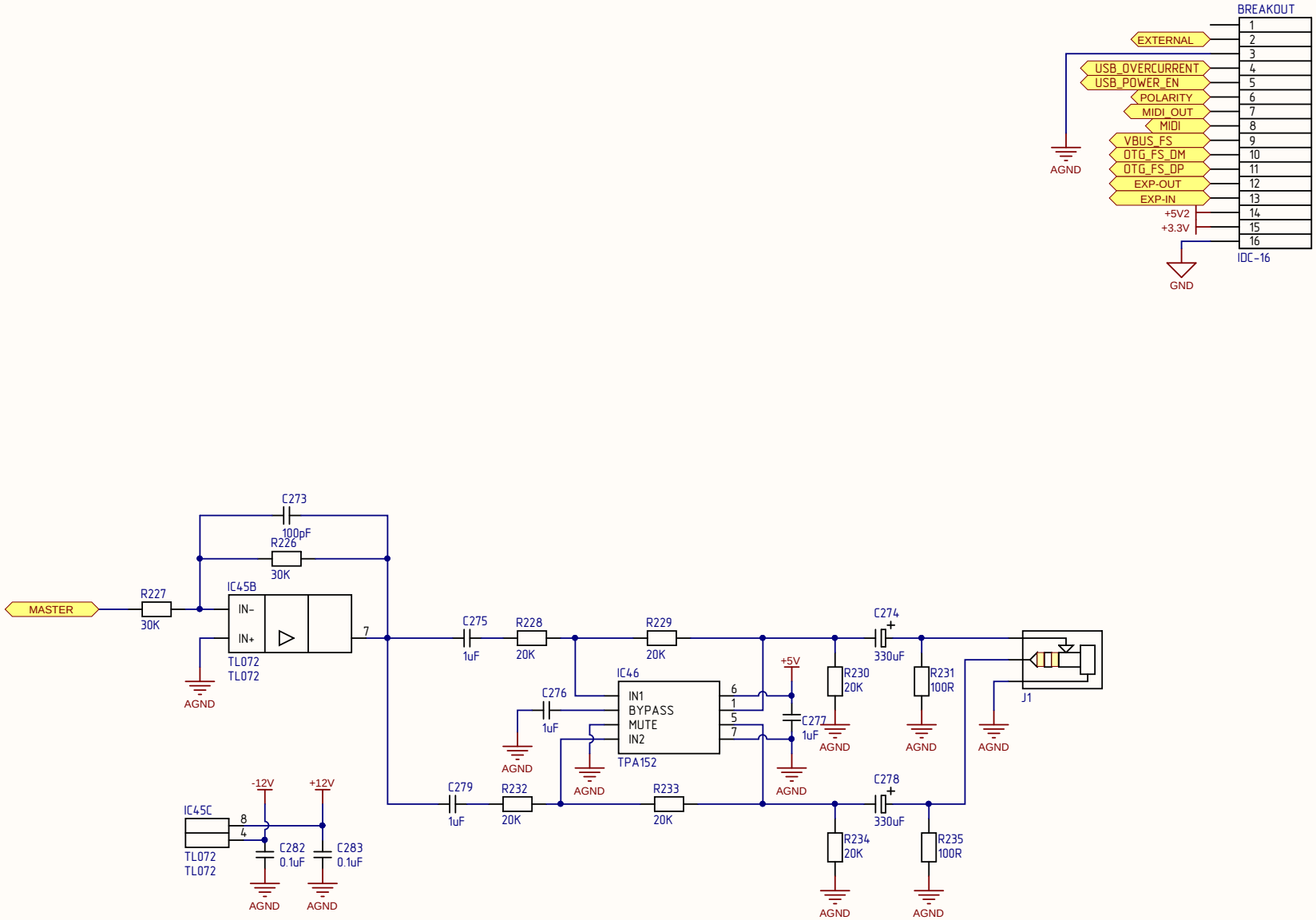
BREAKOUT
EXTERNAL
USB_OVERCURRENT
USB_POWER_EN
POLARITY
MIDI_OUT
MIDI
VBUS_FS
OTG_FS_DM
OTG_FS_DP
EXP-OUT
EXP-IN
+5V2
+3.3V
IDC-16
AGND
GND
MASTER
R227
30K
C273
100pF
R226
30K
IC45B
IN-
IN+
TL072
TL072
AGND
C275
1uF
R228
20K
R229
20K
C276
1uF
IC46
IN1
BYPASS
MUTE
IN2
TPA152
+5V
C277
1uF
R230
20K
R231
100R
C274
330uF
J1
C279
1uF
R232
20K
R233
20K
C278
330uF
R234
20K
R235
100R
-12V
+12V
C281
15uF
C280
15uF
IC45C
TL072
TL072
C282
0.1uF
C283
0.1uF

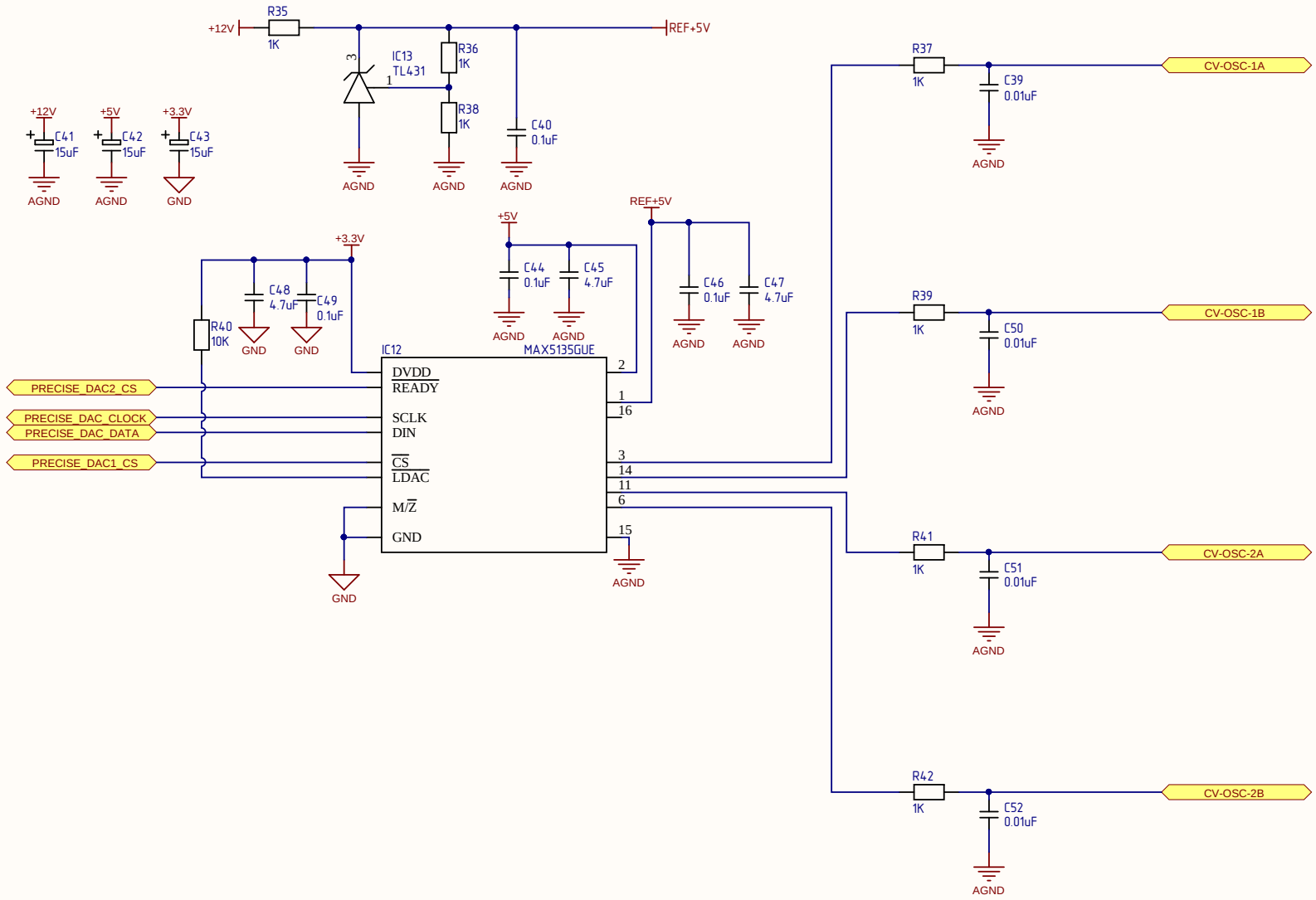
+12V
R35
1K
REF+5V
IC13
TL431
R36
1K
R38
1K
C40
0.1uF
AGND
+12V
+5V
+3.3V
C41
15uF
C42
15uF
C43
15uF
GND
+3.3V
+5V
REF+5V
C44
0.1uF
C45
4.7uF
C46
0.1uF
C47
4.7uF
C48
4.7uF
C49
0.1uF
R40
10K
IC12
MAX5135GUE
DVDD
READY
SCLK
DIN
CS
LDAC
M/Z
GND
PRECISE_DAC2_CS
PRECISE_DAC_CLOCK
PRECISE_DAC_DATA
PRECISE_DAC1_CS
R37
1K
C39
0.01uF
CV-OSC-1A
R39
1K
C50
0.01uF
CV-OSC-1B
R41
1K
C51
0.01uF
CV-OSC-2A
R42
1K
C52
0.01uF
CV-OSC-2B

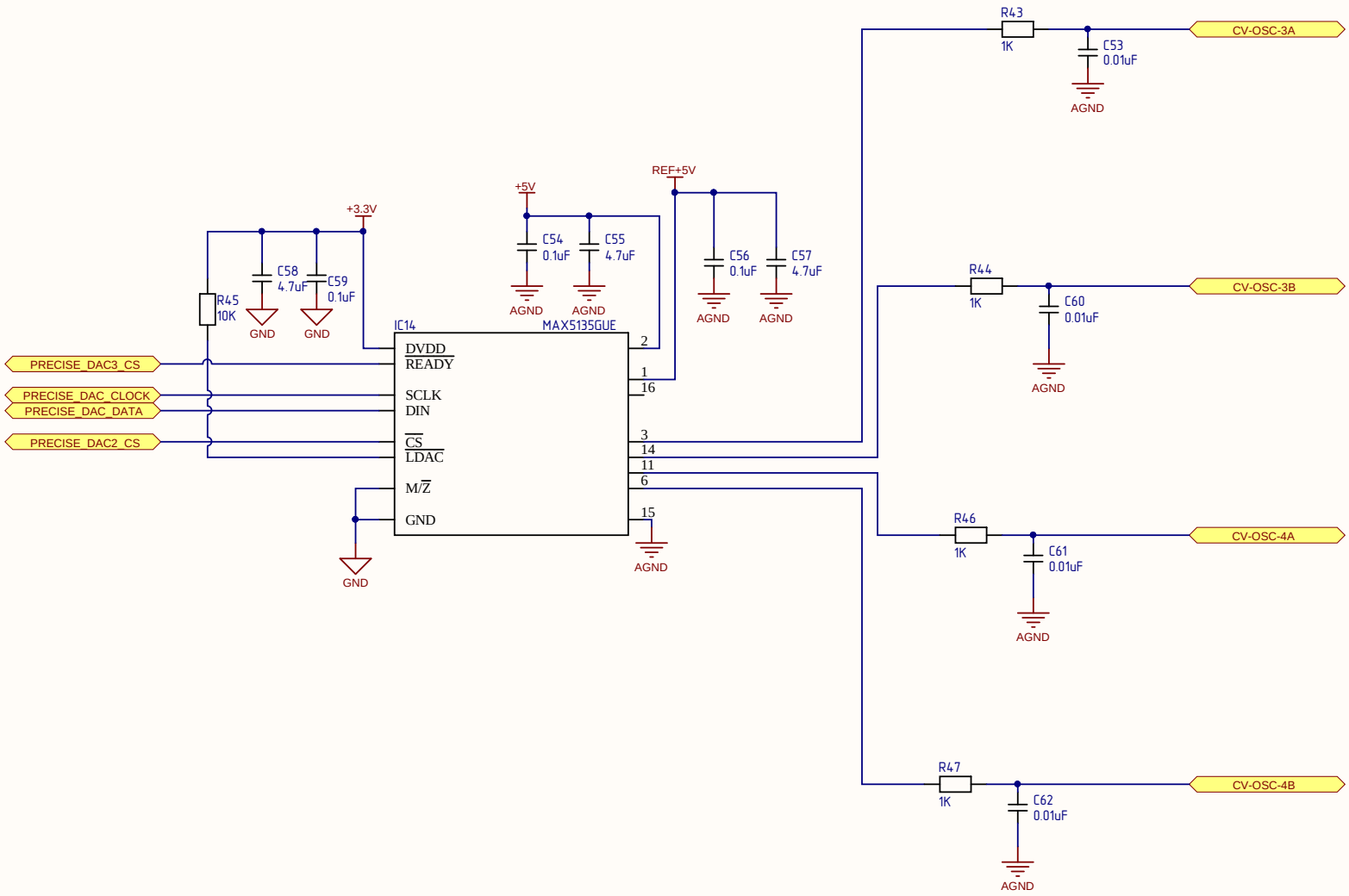
R43
1K
C53
0.01uF
AGND
CV-OSC-3A
R44
1K
C60
0.01uF
AGND
CV-OSC-3B
R46
1K
C61
0.01uF
AGND
CV-OSC-4A
R47
1K
C62
0.01uF
AGND
CV-OSC-4B
REF+5V
+5V
C54
0.1uF
C55
4.7uF
AGND
AGND
C56
0.1uF
C57
4.7uF
AGND
AGND
+3.3V
C58
4.7uF
C59
0.1uF
R45
10K
GND
GND
IC14
MAX5135GUE
DVDD
READY
SCLK
DIN
CS
LDAC
M/Z
GND
2
1
16
3
14
11
6
15
AGND
GND
PRECISE_DAC3_CS
PRECISE_DAC_CLOCK
PRECISE_DAC_DATA
PRECISE_DAC2_CS

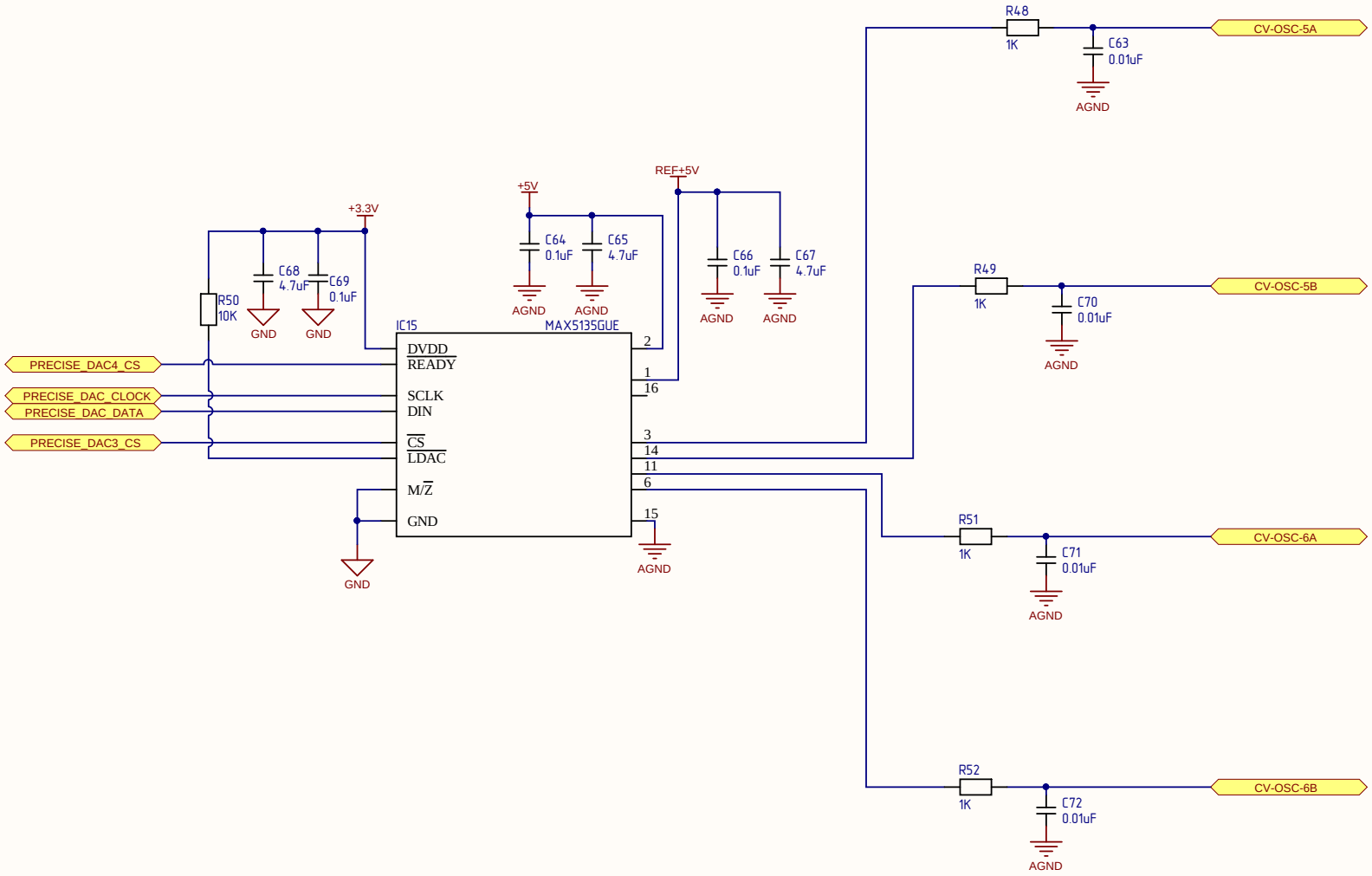
R48
1K
C63
0.01uF
CV-OSC-5A
AGND
REF+5V
+5V
C64
0.1uF
C65
4.7uF
C66
0.1uF
C67
4.7uF
+3.3V
C68
4.7uF
C69
0.1uF
R50
10K
GND
IC15
MAX5135GUE
DVDD
READY
SCLK
DIN
CS
LDAC
M/Z
GND
PRECISE_DAC4_CS
PRECISE_DAC_CLOCK
PRECISE_DAC_DATA
PRECISE_DAC3_CS
R49
1K
C70
0.01uF
CV-OSC-5B
R51
1K
C71
0.01uF
CV-OSC-6A
R52
1K
C72
0.01uF
CV-OSC-6B

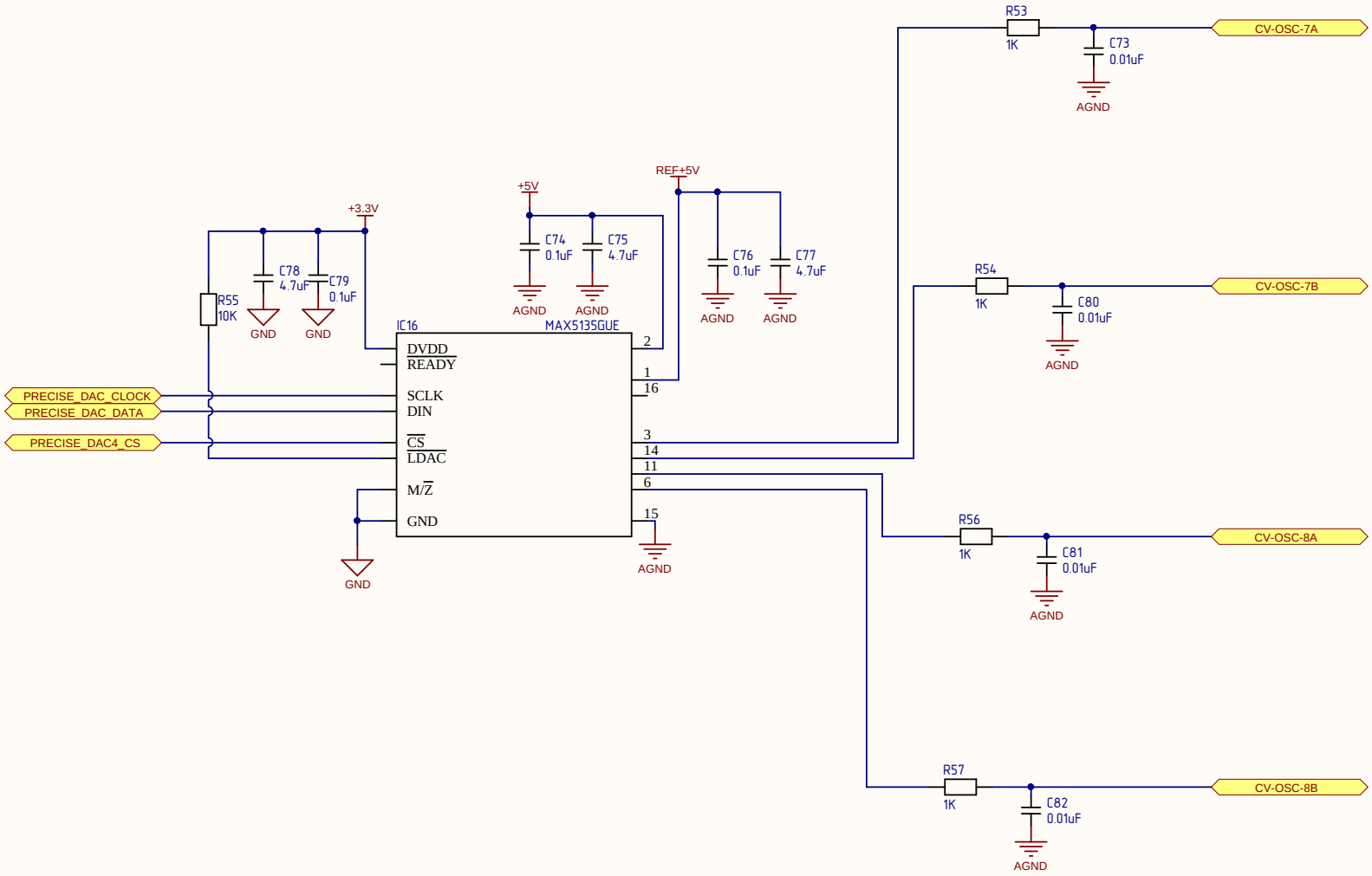
R53
1K
C73
0.01uF
AGND
CV-OSC-7A
REF+5V
+5V
C74
0.1uF
C75
4.7uF
AGND
AGND
C76
0.1uF
C77
4.7uF
AGND
AGND
+3.3V
C78
4.7uF
C79
0.1uF
R55
10K
GND
GND
IC16
MAX5135GUE
DVDD
READY
SCLK
DIN
CS
LDAC
M/Z
GND
2
1
16
3
14
11
6
15
AGND
GND
PRECISE_DAC_CLOCK
PRECISE_DAC_DATA
PRECISE_DAC4_CS
R54
1K
C80
0.01uF
AGND
CV-OSC-7B
R56
1K
C81
0.01uF
AGND
CV-OSC-8A
R57
1K
C82
0.01uF
AGND
CV-OSC-8B

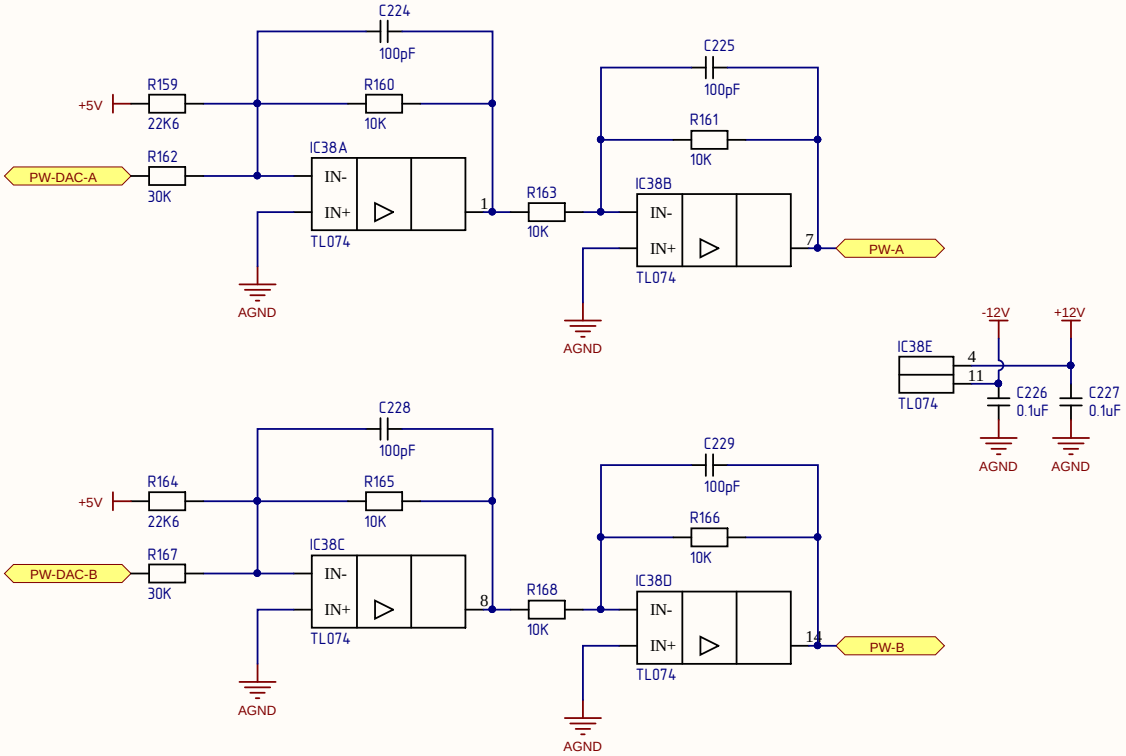


| Title | | |
|---|---|---|
| Size A4 | Number | Revision |
| Date: 2019/06/27 | | Sheet of |
| File: C:\Users\..\PWM.SchDoc | | Drawn By: |

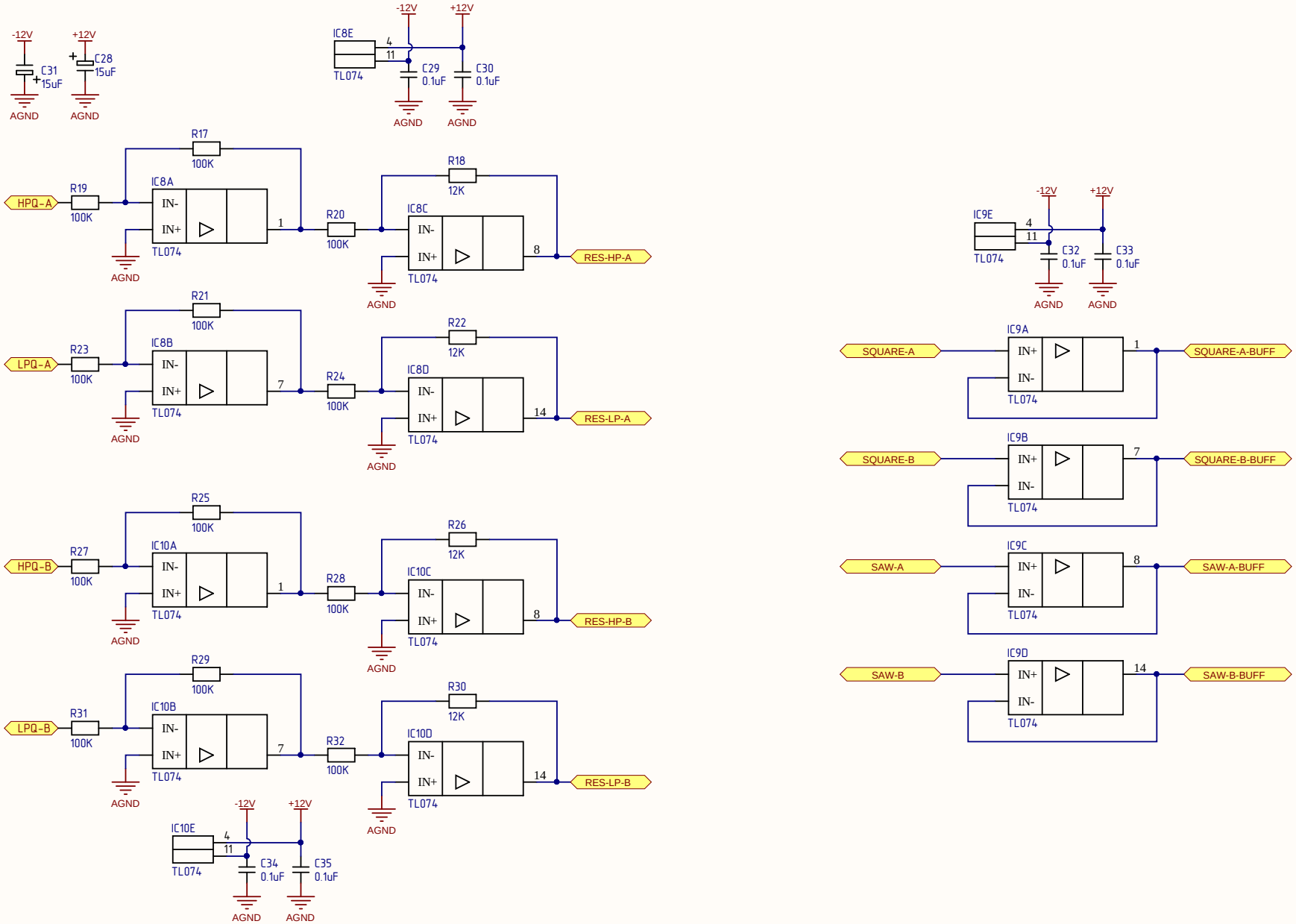
-12V
+12V
C31
15uF
C28
15uF
AGND
IC8E
TL074
C29
0.1uF
C30
0.1uF
R17
100K
R18
12K
HPQ-A
R19
IC8A
IC8C
R20
RES-HP-A
R21
R22
LPQ-A
R23
IC8B
IC8D
R24
RES-LP-A
R25
R26
HPQ-B
R27
IC10A
IC10C
R28
RES-HP-B
R29
R30
LPQ-B
R31
IC10B
IC10D
R32
RES-LP-B
IC10E
C34
0.1uF
C35
0.1uF
IC9E
C32
0.1uF
C33
0.1uF
SQUARE-A
IC9A
SQUARE-A-BUFF
SQUARE-B
IC9B
SQUARE-B-BUFF
SAW-A
IC9C
SAW-A-BUFF
SAW-B
IC9D
SAW-B-BUFF
IN-
IN+

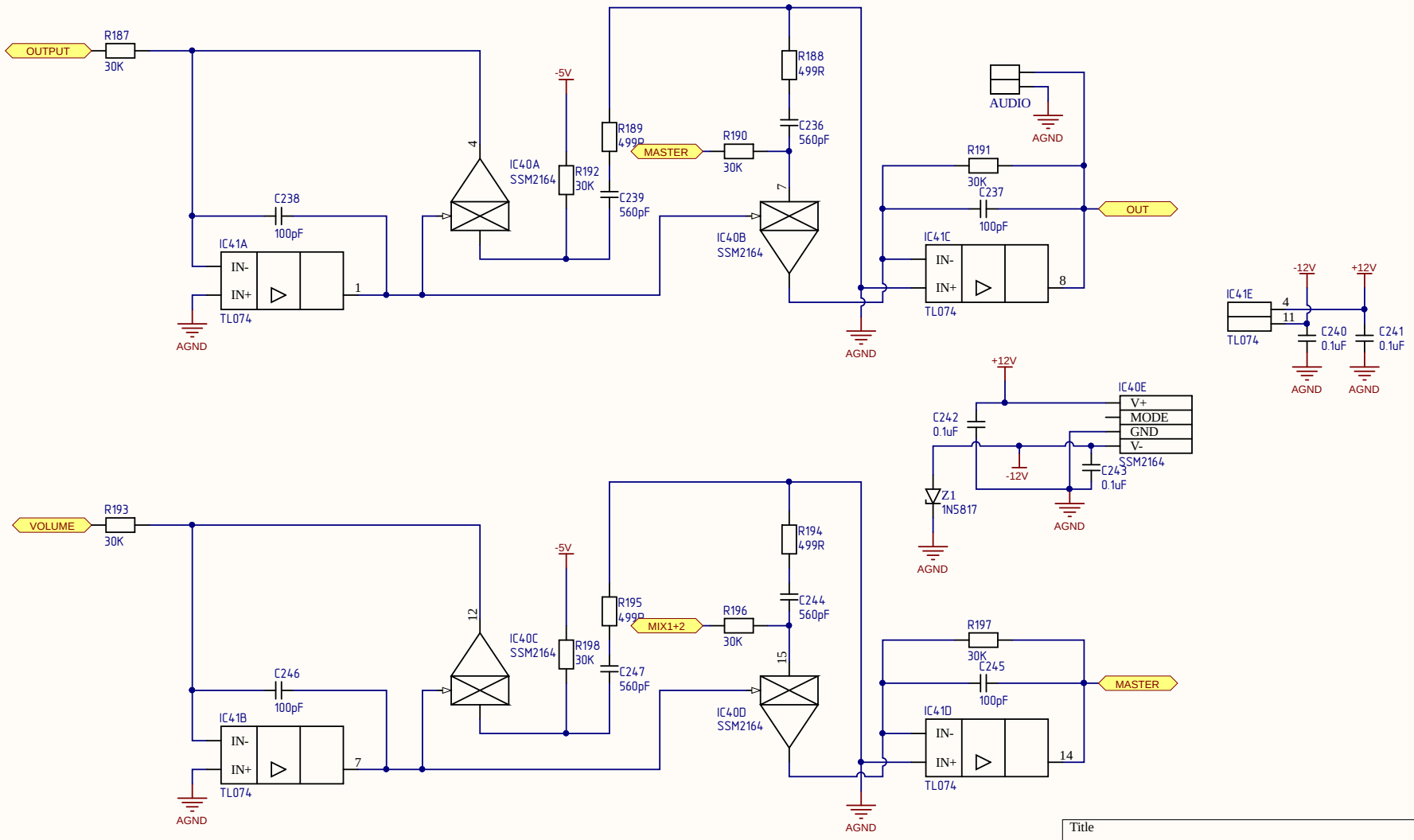


| Title | | |
|---|---|---|
| Size A4 | Number | Revision |
| Date: 2019/06/27 | | Sheet of |
| File: C:\Users\..\VCA-1.SchDoc | | Drawn By: |

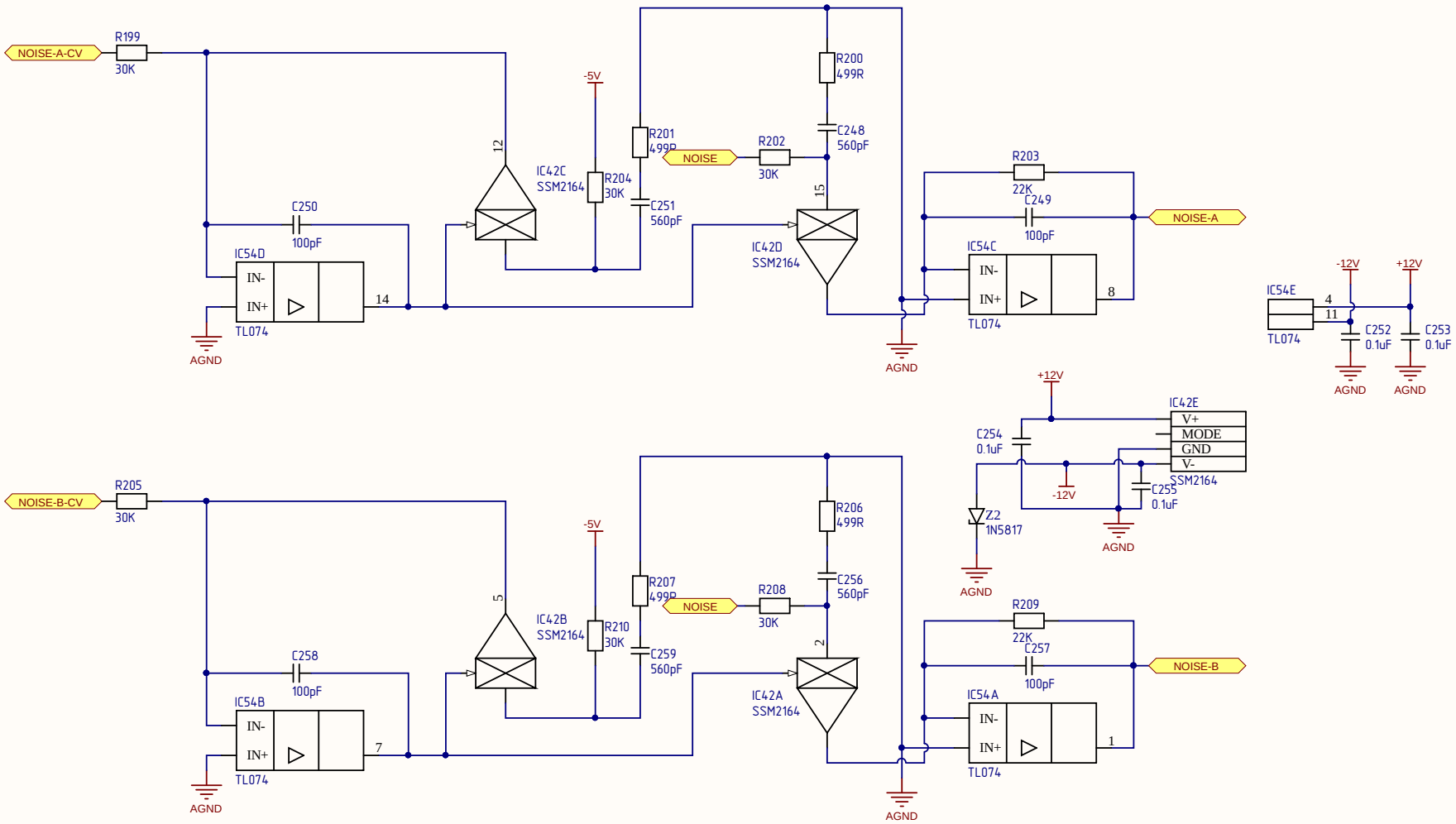


| Title | | |
|---|---|---|
| Size A4 | Number | Revision |
| Date: 2019/06/27 | | Sheet of |
| File: C:\Users\..\VCA-2.SchDoc | | Drawn By: |

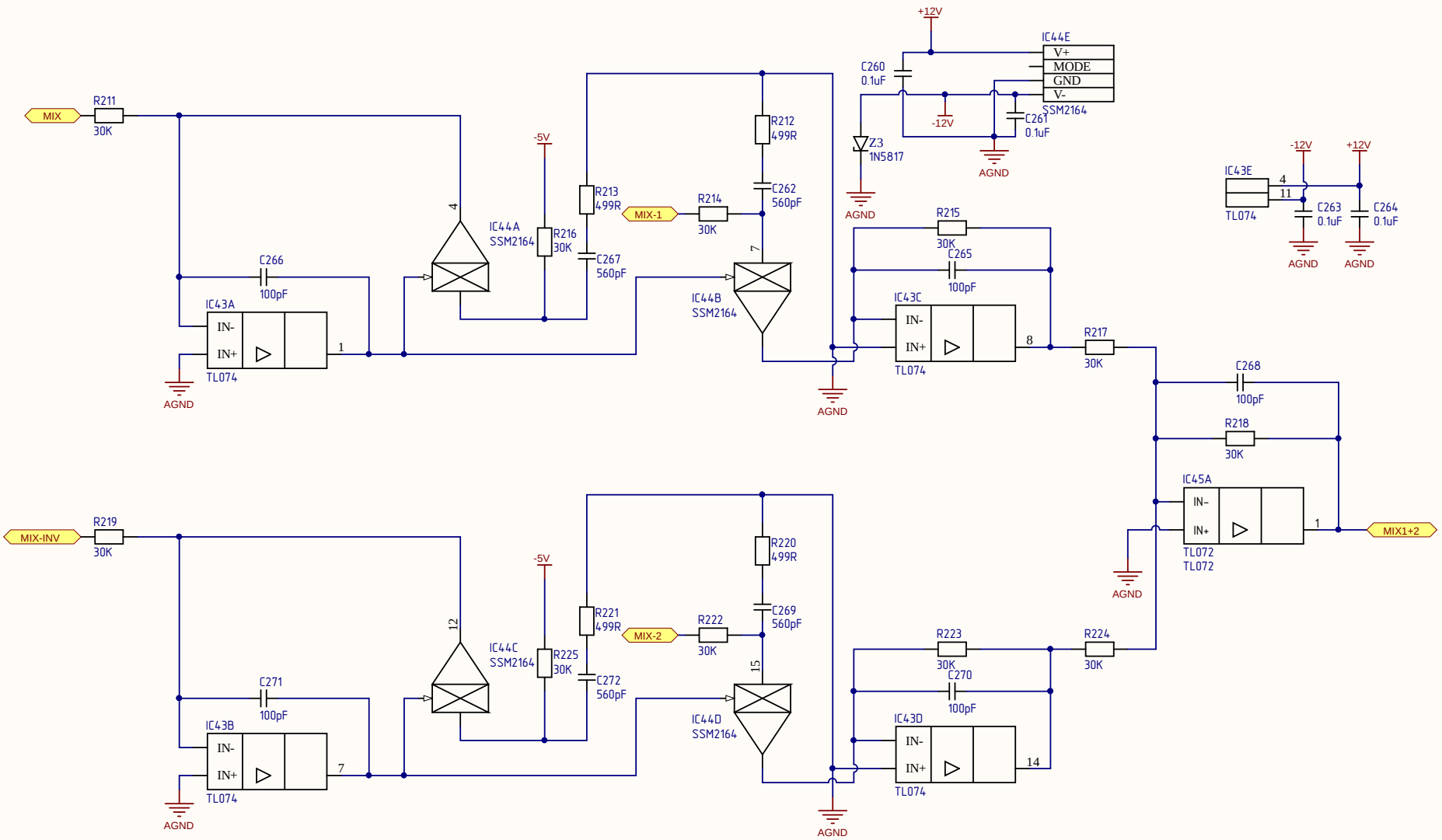


| Title | | |
|---|---|---|
| Size A4 | Number | Revision |
| Date: 2019/06/27 | | Sheet of |
| File: C:\Users\..\VCA-3.SchDoc | | Drawn By: |